HD-1818-24

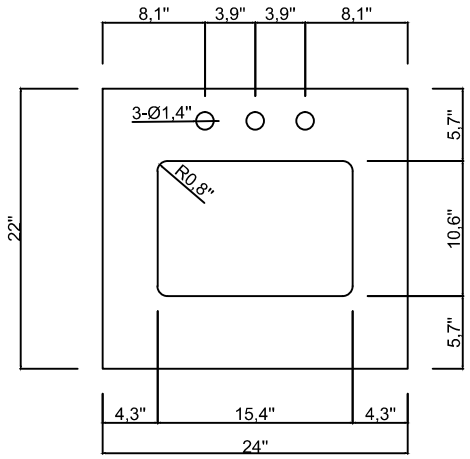

TOP VIEW

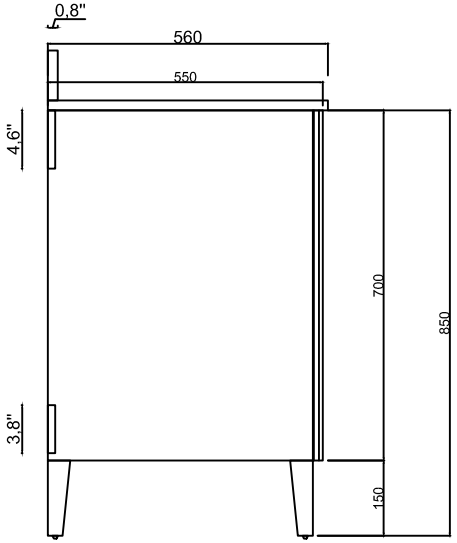

SIDE VIEW

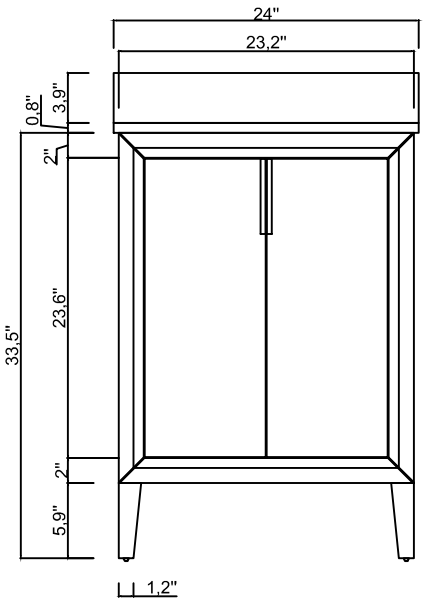

FRONT VIEW

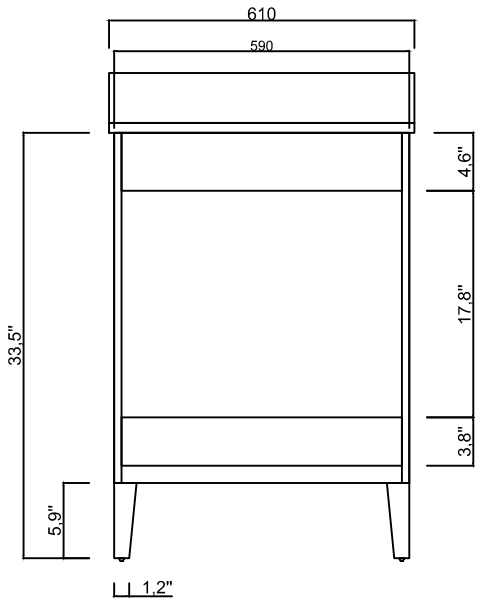

BACK VIEW